BOC
A Member of The Linde Group

A great wine takes much more than just a bunch of grapes.

"Wine is one of the most civilised things in the world and one of the most natural things of the world that has been brought to the greatest perfection, and it offers a greater range for enjoyment and appreciation than, possibly, any other purely sensory thing."

Ernest Hemingway.

Who is BOC?

BOC is a member of The Linde Group which supplies compressed and bulk gases, chemicals and equipment around the globe. The company develops safe, sustainable and innovative solutions for customers in many specialty sectors, heavy industry and medical environments.

For more than a century the company's gases and expertise have contributed to advances in industry and everyday life, including food and beverage processing, steelmaking, refining, chemical processing, environmental protection, wastewater treatment, welding and cutting, glass production, electronics and health care.

BOC understand the effort, expertise and processes needed to create a successful vintage. Therefore you can expect the following:

- Support from our Sales team and Customer Engineering Services (CES) working with you to design, install and maintain a gas system.
- Customer Service Centre available to take your order, enquiry or provide technical support Monday-Friday between 7.30 am-5 pm.
- Extensive gas distribution network including Gas & Gear retail outlets and Gas Agents with flexible delivery options catering to any winery, irrespective of its size.
- Customer Engineering Services (CES) provide a 24 hour, 7 day maintenance and service offer to ensure you can continue focussing on your customers.
- A large network of Gas & Gear retail outlets to provide you with product and equipment advice, support or your choice of picking up cylinders.
- BOC website with online ordering, product, equipment, industry, safety and quality information at www.boc.com.au or www.boc.co.nz

Carbon Dioxide and Nitrogen.

Carbon dioxide (CO_2) and nitrogen (N_2) are used to help protect your product during the winemaking process. Commencing with chilling grapes from harvest to 'must transfer', continuing with displacement of oxygen during the different winemaking stages through blanketing and sparging to inerting during bottling, overall allowing the winemaker to preserve the natural qualities of the wine.

BOC has developed a comprehensive range of gas supply packages to suit all users. When determining the most appropriate and cost effective package, pressure, volume, usage and flow rate are factors which need to be considered.

The following range of CO_2 and N_2 supply options are available to suit your needs:

- Manifolded cylinder packs of various cylinder quantity formats
- GASMATIC® vessels ranging between 180 kg and 330 kg
- Small cryogenic vessels ranging between 1,000 litres (1 tonne) and 3,000 litres (3 tonnes)
- Large cryogenic vessels ranging between 3,000 litres (3 tonnes) and 50,000 litres (50 tonnes)

Alternatively, CO_2 snow is available through the use of an on site snow horn, or dry ice which can be delivered directly from BOC. Our snow horns have a low velocity, high efficiency design and can be purchased or facilitised.

Gas supply options.

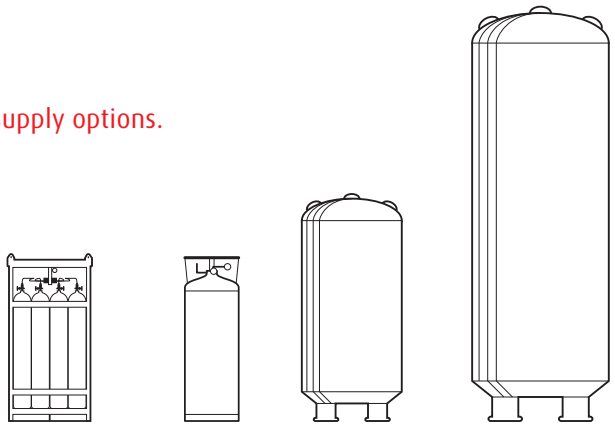

Manifolded cylinder packs Various cylinder quantity formats | GASMATIC® 180–330 kg | Small cryogenic vessels 1,000–3,000 litre (1–3 T) | Large cryogenic vessels 3,000–50,000 litre (3–50 T)

Image is for illustrative purposes only.

Dry ice.

Snow horn.

Nitrogen generators.

ECOVAR® nitrogen generator.

The ECOVAR® concept from BOC is the solution of choice for wineries that require continuous, if sometimes fluctuating amounts of high-quality nitrogen gases. With our ECOVAR® on-site gas generation plants, we ensure a continuous, monitored and flexible gas supply at the customer's site. For the on-site production of nitrogen we combine standardised components which are cost efficiently adapted to the specific demands on location. In these gas generation plants, nitrogen is separated from the air using adsorption-based carbon molecular sieve (CMS). The ECOVAR® 'mini'-N range of plants are highly compact and modular which enables easy transport, rapid installation and a provision for future scalability. The 'mini'-N plants also have a low power consumption resulting in reduced on-going operational costs for the end user.

Mk 5 nitrogen generator.

The Mk 5 on-site nitrogen generator produces a continuous supply of clean, dry, high purity nitrogen from compressed air using Pressure Swing Adsorption (PSA) technology and an integral oil-free air compressor. The unit is compact and wall mounted so it won't get in the way. 100% nitrogen is required for the preservation or dispensing of wines. When the unit is connected to a CO_2 source, the system can also produce mixed blends of CO_2 and N_2.

ECOVAR® mini.

Mk 5.

Wine applications.

Application		Recommended Product/Equipment	Image Reference
Harvesting	Adding carbon dioxide gas or CO_2 snow to the harvesting container, if left for more than 12 hours, greatly reduces any potential mould and yeast fermentation due to the expulsion of oxygen, and rapid reduction in temperature. Using approximately 70 kg of CO_2 snow per tonne of grapes, will result in an approximate 10°C drop in temperature. The ideal grape temperature is 8–16°C.	Carbon dioxide Liquid CO_2 (snow) Dry ice pellets Sulphur dioxide	1, 2
Crushing, De-stemming, Pressing, Draining	To prevent oxidation of flavour and aromatics, must can be treated with sulphur dioxide. This inhibits wild yeasts and bacteria which can result in poor wine flavour and low alcohol content due to the incomplete fermentation of grape sugars. Carbon dioxide gas or CO_2 snow can be applied as an inert gas cover during this process. Carbon dioxide gas, CO_2 snow or nitrogen, is often used in grape drainers by winemakers who believe that as the wine drains through the grape skin it entrains air, which can lead to oxidation of the juice causing browning, loss of aroma and flavour.	Carbon dioxide Liquid CO_2 (snow) Nitrogen or on-site nitrogen generation	3
Fermentation	Macro oxygenation controls the supply of oxygen during fermentation and racking, preventing the fermentation from being too slow or incomplete. It is also helpful at the end of fermentation, when racking, to drop yeast out of suspension, using nitrogen at the rate of 10–30 litres/minute. Sulphur dioxide can be added at this stage to maintain the desired levels.	Nitrogen or on-site nitrogen generation Oxygen Sulphur dioxide	4, 5
Treatments	Selected gas mixtures can be used during sparging to reduce dissolved oxygen levels and to maintain carbon dioxide at a natural level.	Nitrogen or on-site nitrogen generation Carbon dioxide Gas mixer Carbon dioxide and nitrogen mixtures	6
Maturation	During storage, wine blanketing and inerting is used to reduce the absorption of dissolved oxygen into the wine. Oxidative degradation, causes ageing of wine, flatness in flavour and bouquet, and can taste and smell oxidised. It can turn the wine brown in colour. To protect wine with ullage, three gases can be used: **Nitrogen** Not an effective blanketing gas, as it is lighter than air. However various methods can be used to keep the tank under constant positive pressure, enabling nitrogen with its low solubility benefits to be used. To reduce the oxygen concentration from 20% to 1%, the ullage space will need to be purged multiple times. **Carbon dioxide, CO_2 snow and dry ice pellets** The fact that these products are 1.5 times heavier than air means that they are most commonly used by winemakers as a blanketing gas. However, they are both quite soluble in liquids, and when using these products, the ullage space should be recharged every 2–3 days. For open top tanks, carbon dioxide is the preferred gas. **Argon** Argon is the premium gas to keep wine at its peak prior to bottling. It has all the benefits of carbon dioxide, but is 38% less soluble. Argon will last longer as a blanketing gas, and is totally inert. Micro oxygenation is used to simulate the absorption of oxygen into the wine when stored in stainless steel tanks. This process occurs naturally in wines that have matured in barrels, particularly red wines.	Carbon dioxide Liquid CO_2 (snow) Dry ice pellets Nitrogen or on-site nitrogen generation Argon Oxygen Carbon dioxide and nitrogen mixtures	7
Filling Barrels, Pressure Transfer	Nitrogen, carbon dioxide and nitrogen mixtures, can be used to transfer wines without the risk of oxygen pickup.	Nitrogen or on-site nitrogen generation Argon Carbon dioxide and nitrogen mixtures Sulphur dioxide barrel sterilising	8, 9
Bottle Inerting	If the wine is splashed when filling into bottles, it exposes the wine to significant air contact. To reduce the amount of contact with air, the bottles are evacuated and flushed with nitrogen or carbon dioxide gas or liquids.	Liquid nitrogen Liquid CO_2 (snow) Carbon dioxide	10
Safety Equipment	From harvesting to bottling, let BOC help you meet your occupational health and safety requirements. With a comprehensive range of personal protective equipment and safety products you can ensure your workplace is safe for both you and your workers.		

Winemaking process.

Harvesting

1 Grapes protection
CO_2 snow, dry ice or sulphur dioxide

2 Chilling grapes with carbon dioxide
CO_2 snow

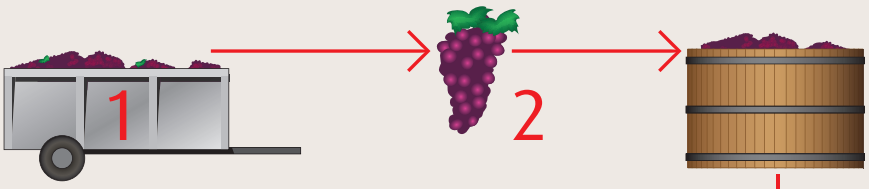

Fermentation

3 Transport protection
Carbon dioxide or nitrogen

4 Control fermentation
Oxygen

Protection
Sulphur dioxide

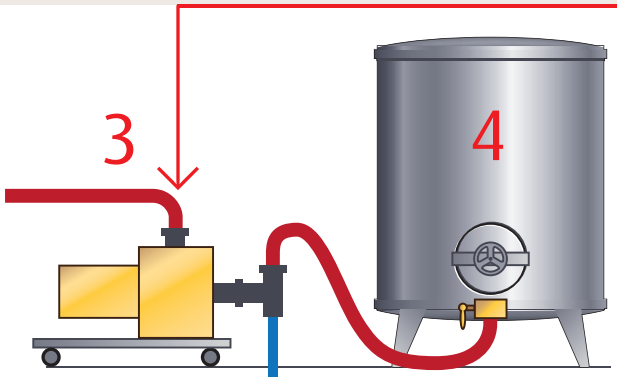

Treatments

5 Stop fermentation
Nitrogen

6 Maintain natural level of carbon dioxide in wine
Carbon dioxide, nitrogen or
carbon dioxide/nitrogen mixtures

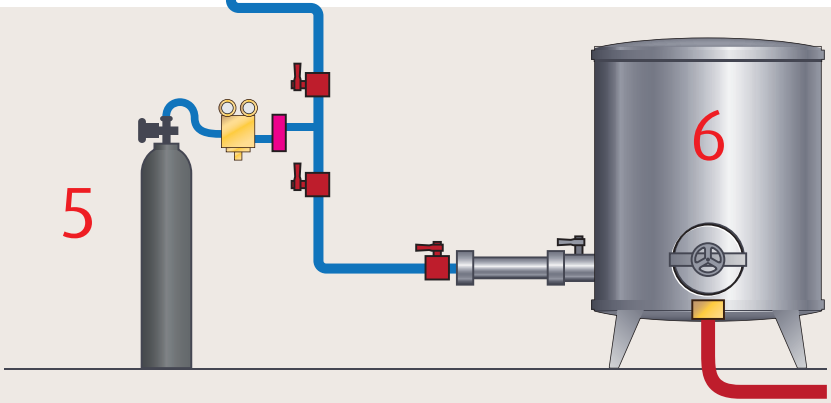

Maturation

7 Blanketing gas
Nitrogen, carbon dioxide, argon

8 Refilling barrels
Nitrogen or
carbon dioxide/nitrogen mixtures

Protection
Sulphur dioxide

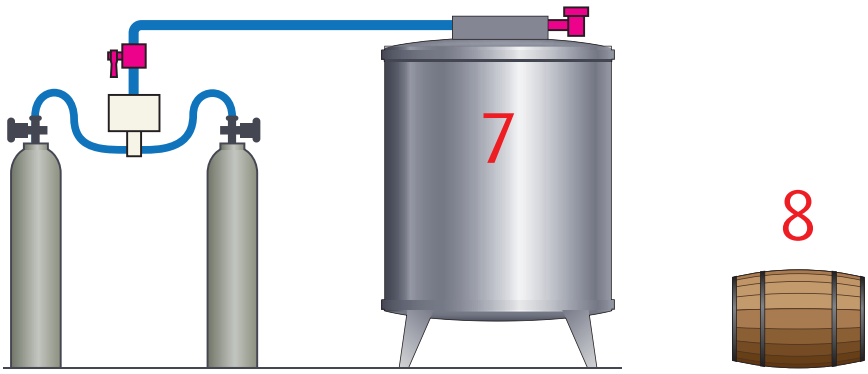

Filling/bottling

9 Pressure Transfer
Carbon dioxide, nitrogen or
carbon dioxide/nitrogen mixtures

10 Bottling protection
Nitrogen or carbon dioxide

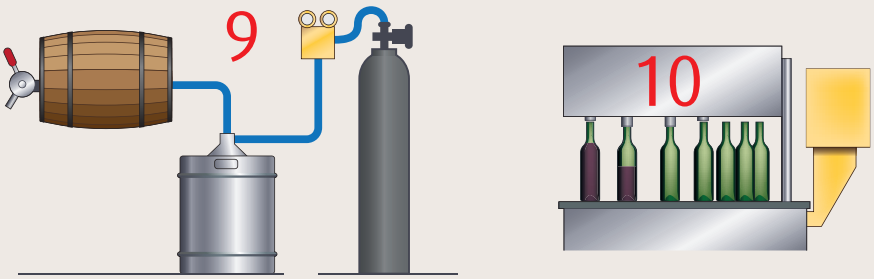

Image is for illustrative purposes only.

Compressed gases. Australia.

	Description	Gas Composition	Package Size*	Package Content	Package Diameter**	Package Height**	Package Length	Gauge Pressure	Outlet Connection
	**Carbon Dioxide Food Grade** **Gas Code: 082** Food grade quality gas used in pressure beverage dispensing or to protect grapes during the winemaking process.	Carbon Dioxide 99.9%	D	6.0 kg	175 mm	585 mm	–	5700 kPa	AS 2473 Type 30
			VT	10.0 kg	215 mm	625 mm			
			F	22.0 kg	215 mm	1245 mm			
			G	31.0 kg	250 mm	1365 mm			
	**Nitrogen** **Gas Code: 036** Beverage gas used to protect grapes during the winemaking process.	Nitrogen 99.99%	D	1.4 sm^3	175 mm	585 mm	–	16300 kPa	AS 2473 Type 50
			E	3.6 sm^3	215 mm	955 mm			
			G	7.2 sm^3	250 mm	1365 mm			
	**Oxygen** **Gas Code: 025** Beverage gas used to speed up fermentation and age wines as well as to form yeast in breweries.	Oxygen 99.5%	E	4.1 sm^3	215 mm	955 mm	–	16300 kPa	
			G	8.9 sm^3	250 mm	1365 mm	–	17500 kPa	AS 2473 Type 10
	**Argon VinAr** **Gas Code: 074** Beverage gas typically used to preserve and dispense wine.	Argon 99.99%	C	0.5 sm^3	117 mm	410 mm	–	16900kPa	AS2473 Type 10
	**Sulphur Dioxide** **Gas Code: 172** Used as a preservative for wine, beer and food. Wineries also use it to sterilise the inside of wine barrels.	Sulphur Dioxide 99.9%	P	27 kg	310 mm	510 mm#			
			R	70 kg	375 mm	840 mm#	–	235kPa	AS2473 Type 32
	**Sulphur Dioxide Drum** **Gas Code: 173** Used as a preservative for wine, beer and food. Wineries also use it to sterilise the inside of wine barrels.	Sulphur Dioxide 99.9%	WH	540 kg	800 mm^	1100 mm^	1400 mm^		
			WT	950 kg	800 mm^	1100 mm^	2250 mm^	235 kPa	AS 2473 Type 32
	**MULTIMIX® 30** **Gas Code: 037** Beverage gas.	Carbon Dioxide 30%, Nitrogen 70%	VT	2.3 sm^3	215 mm	625 mm			
			F	5.2 sm^3	215 mm	1245 mm			
			G	7.3 sm^3	250 mm	1365 mm	–	13400 kPa	AS 2473 Type 50
	**CELLAMIX® 40** **Gas Code: 085** Beverage gas.	Carbon Dioxide 40%, Nitrogen 60%	VT	2.2 sm^3	215 mm	625 mm			
			F	4.9 sm^3	215 mm	1245 mm	–	12000 kPa	AS 2473 Type 30
	**CELLAMIX® 55** **Gas Code: 098** Beverage gas.	Carbon Dioxide 55%, Nitrogen 45%	VT	2.7 sm^3	215 mm	625 mm			
			F	6.0 sm^3	215 mm	1245 mm	–	12000 kPa	AS 2473 Type 30
	**CELLAMIX® 75** **Gas Code: 097** Beverage gas.	Carbon Dioxide 75%, Nitrogen 25%	F	6.0 sm^3	215 mm	1245 mm	–	9300 kPa	AS 2473 Type 30

*Availability of package sizes will vary across the states. **Based on aluminium cylinders without a valve. #Includes valve protection ring. ^Dimensions are based on drum and cradle.

Gas cylinder safety.

For anyone using compressed gas cylinders, knowledge and understanding of the Do's and Don'ts is essential. Please refer to the Guidelines for Gas Cylinder Safety available at www.boc.com.au for detailed information relating to safe handling of gas cylinders.

New Zealand.

	Description	Gas Composition	Package Size*	Package Content	Package Diameter**	Package Height**	Gauge Pressure	Outlet Connection
	**Carbon Dioxide Food Grade** **Gas Code: 214** Food grade quality gas used in pressure beverage dispensing or to protect grapes during the winemaking process.	Carbon Dioxide 99.8%	D	6.8 kg	178 mm	605 mm		
			F	17.0 kg	215 mm	955 mm		
			G	33.0 kg	232 mm	1400 mm	5,723 kPa	AS 2473 Type 30
	**Nitrogen** **Gas Code: 157** Beverage gas used to protect grapes during the winemaking process.	Nitrogen 99.99%	D	1.8 sm^3	178 mm	605 mm		
			G	8.7 sm^3	232 mm	1400 mm	20,000 kPa	AS 2473 Type 50
	**Oxygen** **Gas Code: 101** Beverage gas used to speed up fermentation and age wines as well as to form yeast in breweries.	Oxygen 99.5%	D	1.4 sm^3	178 mm	605 mm	15,200 kPa	
			G	8.1 sm^3	232 mm	1400 mm	17,200 kPa	AS 2473 Type 10
	**Argon** **Gas Code: 274** Beverage gas typically used to preserve and dispense wine.	Argon 99.99%	G	9.93 sm^3	232 mm	1400 mm	20,000 kPa	AS 2473 Type 10
	**Sulphur Dioxide** **Gas Code: 172** Used as a preservative for wine, beer and food. Wineries also use it to sterilise the inside of wine barrels.	Sulphur Dioxide 99.9%	P	27 kg	310 mm	510 mm#		
			R	70 kg	375 mm	840 mm#	235 kPa	AS 2473 Type 32
	**CELLAMIX® 20** **Gas Code: 320** Beverage gas.	Carbon Dioxide 20%, Nitrogen 80%	E	2.43 sm^3	216 mm	630 mm		
			G	7.3 sm^3	232 mm	1400 mm	15,200 kPa	AS 2473 Type 50
	**CELLAMIX® 30** **Gas Code: 093** Beverage gas.	Carbon Dioxide 30%, Nitrogen 70%	E	2.5 sm^3	216 mm	630 mm		
			G	7.5 sm^3	232 mm	1400 mm	14,600 kPa	AS 2473 Type 50
	**CELLAMIX® 60** **Gas Code: 096** Beverage gas.	Carbon Dioxide 60%, Nitrogen 40%	E	3.09 sm^3	216 mm	630 mm		
			G	9.42 sm^3	232 mm	1400 mm	13,000 kPa	AS 2473 Type 10
	**CELLAMIX® 80** **Gas Code: 138** Beverage gas.	Carbon Dioxide 80%, Nitrogen 20%	E	3.8 sm^3	216 mm	630 mm		
			G	11.6 sm^3	232 mm	1400 mm	10,000 kPa	AS 2473 Type 10

*Availability of package sizes will vary across the areas. **Based on aluminium cylinders without a valve. #Includes valve protection ring.

Sulphur Dioxide.

Sulphur dioxide (SO_2) is typically used as a preservative for wine. It is a sensitive chemical and therefore comes under the Product Stewardship program. Through this BOC complies with all relevant regulatory requirements and standards. Ensuring our customers can produce the best quality product using our sulphur dioxide is what we value the most and are committed to delivering. A quality system is in place that meets the requirements of ISO 9001:2008 Certificate (Quality Management Systems).

Our production facility in Wagga Wagga, NSW is ideally located within close proximity and access to many wine growing regions. To support the needs of small and large wineries we have a variety of sizes available in both cylinders and drums.

Sulphur dioxide supply.

Equipment.

Equipment

- Wine bottle inerting kits
- SO_2 barrel sterilising gun kits
- Mini snow horns
- G-TECTA® portable gas detection instruments
- CELLAGUARD® carbon dioxide or carbon dioxide and oxygen monitors
- CO_2 heaters
- LPG vineyard heaters
- Flow meters
- Floating gas dispensers
- Gas timers and mixers
- Gas manifolds
- Regulators
- Welding machines and consumables
- PESTIGAS® spray gun kits
- Dry ice machines

Safety equipment

- Outdoor clothing for use in vineyards and wineries
- High visibility protective clothing
- Safety spectacles/goggles
- Gloves and hand protection
- Overalls
- Safety shoes and boots
- Earplugs and earmuffs
- Respiratory protection
- First aid kits
- Safety signage

Workshop gases & LPG

- Industrial oxygen
- Industrial acetylene
- Industrial argon
- Industrial shielding gases
- LPG

Specialty gases

- PESTIGAS®
- Scientific calibration gases

CELLAGUARD® Carbon dioxide (CO_2) monitor and repeater.

For more information contact the BOC Customer Service Centre on:

Australia
131 262
contact@boc.com

New Zealand
0800 111 333
customer.serviceNZ@boc.com

BOC Limited ABN 95 000 029 729
10 Julius Avenue, North Ryde NSW 2113, Australia
www.boc.com.au

BOC Limited WN007748
970–988 Great South Road, Penrose, Auckland, New Zealand
www.boc.co.nz

MP12-0784-1 FDAUS 0713 2K